سيف الجزيرة
SAIf Al JAZIRA

SAIF AL JAZIRA · LIGHT & DESIGN

The Lighting Guide



Through the Designer’s Eye
Choosing the piece. Shaping the light.

ILLUSTRATED EDITION · NOVEMBER 2026

A GUIDE TO CHOOSING

Inside the Guide

From your first impression of a fitting to seeing it illuminated in its setting, this guide helps you ask the right questions and choose lighting that reflects your taste and supports everyday life.

01 Through the Designer's Eye 03

- The fitting and the room 03
- Classic, contemporary, modern 05
- Oriental craft and local identity 08
- Scale, tables, domes, stairs and entrances 13
- Coordination, finishes and the illuminated scene 18
- Shadows and visual comfort 21
- Selection and confirmation 23

02 Details That Define Value 25

03 Lighting for Every Space 26

04 Understanding the Light 28

Through the Designer's Eye: Selected Examples — pages 29–32

Sources and notes on photographs and illustrations — pages 33–35

CHAPTER 01 / THROUGH THE DESIGNER'S EYE

Through the Designer's Eye



The chandelier in relation to architecture and furniture.

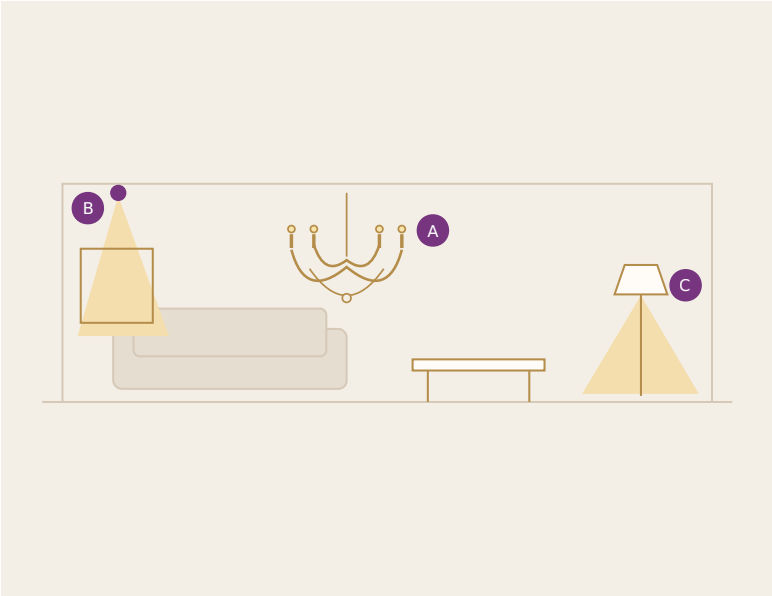

A: decorative fitting. B: wall accent. C: reading light. Sources work together around activities.

A chandelier can shape the character of a room even when it is switched off. Its form, material and relationship with the architecture and furnishings establish its presence. When illuminated, it adds another layer: glow, reflections, shadows and light falling on people and surfaces.

Decorative and technical lighting

Decorative lighting gives the fitting itself a visible role: chandeliers, lanterns, wall lights and table lamps. These pieces may also provide general illumination, reading light or light on a particular surface. Technical lighting is selected primarily for where its light falls, its distribution and visual comfort. Adjustable spotlights and wallwashers are examples, and can be visible or integrated into the architecture.

How they work together

In a majlis, a central lantern can establish identity, directed lighting can reveal a textured wall or artwork, and another source can support reading or everyday activities. Coordinating these sources and controlling them in groups allows the atmosphere to change with the occasion.

When choosing a fitting, ask what it contributes to the room's character and what its light helps you see or do.

Further reading: 1, 2 · sources at the end of this guide

CHAPTER 01 / THROUGH THE DESIGNER'S EYE

Reading the Room



Considering form and proportion before selection.

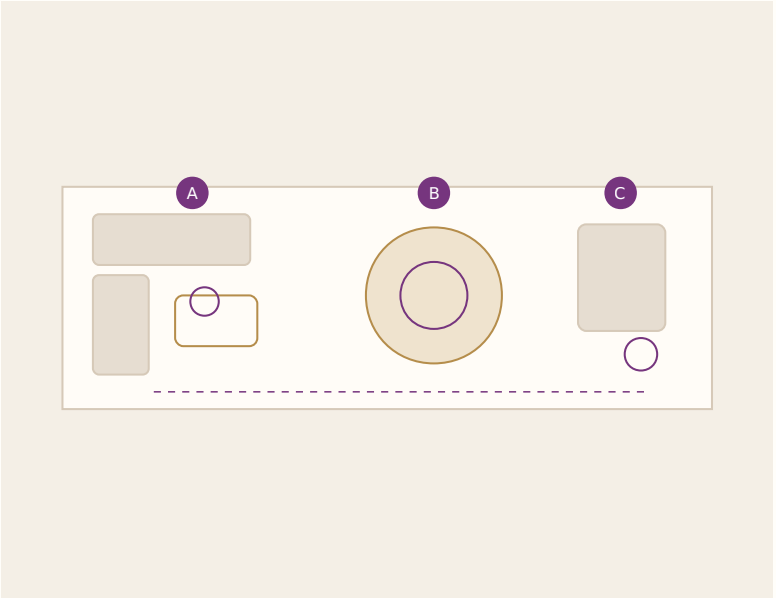

A: seating. B: dining. C: reading. Locate lighting around furniture and shared views.

Begin by viewing the room from the entrance, then from the places where you will sit. A fitting's presence changes with the viewpoint, ceiling height and the background behind it.

Plan around activities

Identify seating, dining, reading and circulation areas. A furniture plan helps locate the fitting: the centre of the ceiling does not always coincide with the centre of the seating arrangement or table. In an open space, each zone can have a lighting composition related to its use.

Consider the surroundings

Observe the architecture, wall divisions, furniture and curtains. An open lantern may appear visually light against a detailed background, while a fuller chandelier can give a simpler room a clear focal point. Decide what should attract attention first, then arrange the elements that support it.

Bring clear photographs, a dimensioned furniture plan and the finished ceiling height to the showroom. These details give the specialist a better basis for helping you choose.

Further reading: 1 · sources at the end of this guide

CHAPTER 01 / THROUGH THE DESIGNER'S EYE

Classic: Reading the Details



Layers of crystal and a richly detailed silhouette.



Curved arms and expressive glass details.

In classical lighting, a fitting's character may begin with the curve of an arm, the balanced arrangement of candle-style lights or tiers of crystal around a central body. This description encompasses designs inspired by different decorative traditions, allowing a piece to be restrained and balanced or rich in detail.

Compare the overall silhouette first, then look more closely. How are the arms arranged? How does the body's height relate to its width? Will the ornament remain legible from the intended viewing distance? Gold colour or abundant crystal alone does not define the style.

A classical chandelier can complement an ornate ceiling or regularly divided walls, or become a focal point within a simpler room. Look for relationships: a curve that echoes the furniture, or a symmetrical arrangement that responds to the architecture. Harmony does not require the same ornament on every element.

Further reading: 1, 2 · sources at the end of this guide

CHAPTER 01 / THROUGH THE DESIGNER'S EYE

Contemporary: Freedom of Composition



Masiero Nappe: a rhythm of elements above the table. Dimore catalogue, p.105.



A Nappe detail showing the variety of forms. Masiero, p.104.

Contemporary lighting reflects present-day approaches and accommodates many visual languages: a sculptural piece, a suspended group or a new interpretation of a familiar form. It may draw on classical or modern design while arranging those references in a fresh composition.

With asymmetrical or multi-level designs, assess several viewpoints. How does the fitting appear from the entrance and seating area? Do the spaces between its elements balance with the surrounding furniture? In tall spaces, consider the view from an upper floor as well.

Above a long table, for example, a group of glass pendants can create a visual extension along its length. The effect changes with the number, arrangement and heights of the units. Ask for a drawing of the whole group in its setting, so you can compare the composition as it will appear after installation.

Further reading: 1 · sources at the end of this guide

CHAPTER 01 / THROUGH THE DESIGNER'S EYE

Modern: Beauty in Simplicity



Masiero Honicé: clear metal lines and onyx elements. p.215.

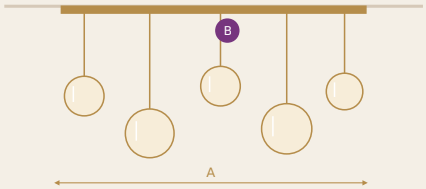

A: overall composition width. B: varied suspension levels. Include the gaps when sizing a group.

Modern lighting is distinguished by clarity of form and simplicity of detail. Its presence comes from the proportions of its elements, their arrangement, and the character of its materials, generally avoiding elaborate applied ornament and dense crystal swags. This visual restraint allows the composition to be understood easily.

A fitting may consist of one simple form or several glass elements suspended on slender cables. Globes, drops, or curved shapes can be arranged at considered heights, with space around each element. Multiple components do not necessarily make a design visually busy; their relationships and overall balance matter.

When choosing this type of fitting, assess the complete composition. Do the glass elements suit the scale of the space? Do the changes in height strengthen the arrangement? How does the group relate to the table or open space beneath it?

Ask to see the proposed suspension arrangement, not just an individual glass element. The same components can produce very different results depending on their number, spacing, and height. In modern lighting, the space between the elements is part of the design.

Further reading: 1 · sources at the end of this guide

CHAPTER 01 / THROUGH THE DESIGNER'S EYE

Oriental Lighting: The Spirit of Craft



A craft illustration from the company website.



Worked metal and glass brought together in a lantern.

Behind many heritage-inspired Oriental lights are skilled hands and traditions passed down through generations. Metal is shaped, hammered, engraved or pierced; glass is blown or decorated. A single fitting may pass through several artisans, each contributing a particular expertise.

These skills develop through practice and knowledge shared within families and workshops, from master to apprentice. The maker's touch appears in the balance of a pattern, the curve of the metal and the meeting of individual components. This care gives the piece its character, connecting its presence to the story of its making.

This world encompasses Islamic and Andalusian influences alongside Moroccan, Egyptian, Levantine and Najdi traditions. These descriptions overlap: a single fitting may combine Islamic ornament, local craftsmanship and a contemporary composition.

Further reading: 3, 4 · sources at the end of this guide

CHAPTER 01 / THROUGH THE DESIGNER'S EYE

Islamic and Andalusian Influences



Layers of light and pierced ornament form a unified chandelier.



Geometric stars and flowing foliage meet in the worked metal.

Islamic: The Beauty of Order

Islamic art provides a broad reference that varies across regions and periods. Geometric compositions, vegetal ornament and Arabic calligraphy are prominent elements. In lighting, they can organise the surface of a fitting or become openings through which light passes. Their appeal lies in proportion and the rhythm of repetition.

Andalusian: The Rhythm of Detail

Andalusian influences draw on interlacing geometry and flowing vegetal and calligraphic ornament found in the arts and architecture of al-Andalus. These references can inform a lantern or chandelier with connected details and space around them to reveal the composition. Historical and artistic connections also create overlaps with Moroccan traditions.

Further reading: 5, 6 · sources at the end of this guide

CHAPTER 01 / THROUGH THE DESIGNER'S EYE

Moroccan, Egyptian and Levantine

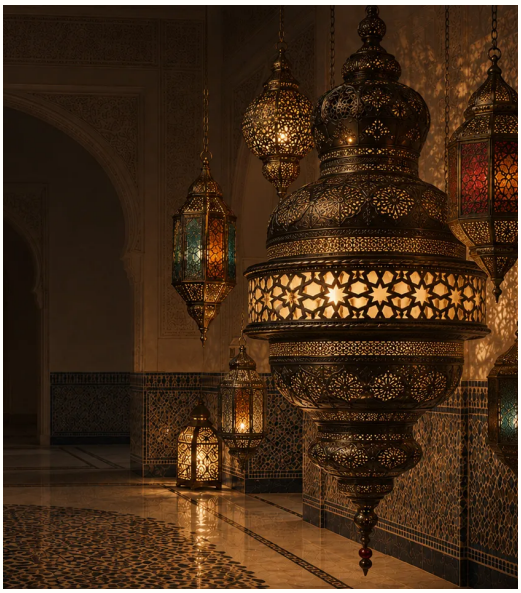

Pierced metal allows light to emerge through the ornament.

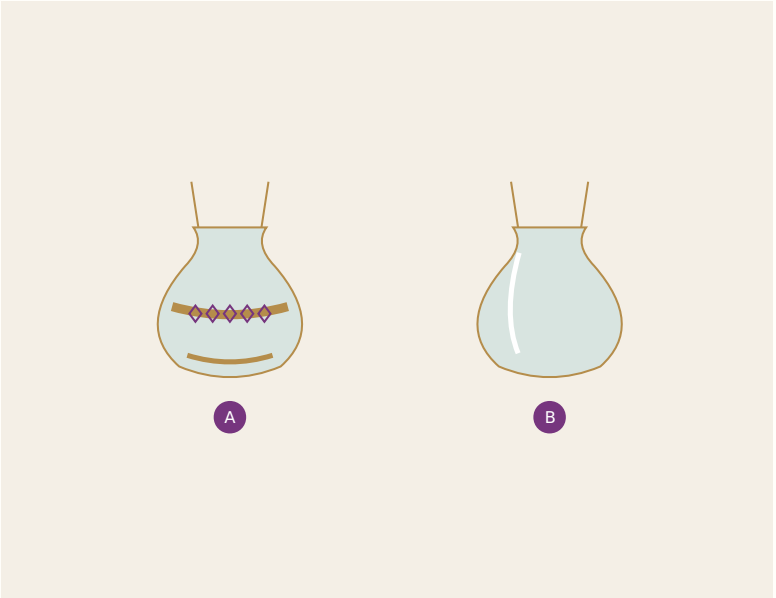

Interpretive sketches: A draws on a decorated mosque-lamp form; B explores a simple glass form. These are not records of historical objects.

Moroccan: Pattern and Light

Many Moroccan fittings highlight the craft of shaping, engraving and piercing copper and brass. In pierced designs, light passing through the ornament becomes part of the fitting's presence. View the piece illuminated to assess both its form and the patterns it may introduce to surrounding surfaces.

Egyptian: The Presence of Ornament

Egyptian lighting traditions offer varied references, from worked-metal lanterns to glass mosque lamps decorated with enamel, gilding and inscriptions, including notable Mamluk examples. This richness can inspire fittings with a defined silhouette and carefully arranged ornament. Consider how the detail relates to the room's scale and the distance from which it will be viewed.

Levantine: The Art of Making

Within Levantine heritage, particularly in Syria, hand-blown Damascene glass offers a distinctive craft reference. Its form and colour develop through the artisan's work, drawing on knowledge passed down in workshops. It can be incorporated into lanterns or pendants alongside worked metal, giving the fitting character through both its details and the light passing through it.

Further reading: 3, 4, 5, 7 · sources at the end of this guide

CHAPTER 01 / THROUGH THE DESIGNER'S EYE

Najdi: The Character of Home



Wall lanterns in dialogue with architectural details.



Repeated lanterns within the ceiling's divisions.

Najdi character draws from the region's architecture and crafts: earthen buildings, triangular openings, gypsum ornament and carved or painted wooden doors. This heritage includes triangles, circles, dots and repeating compositions that offer varied references for lighting design.

In a Najdi-inspired fitting, the rhythm of wall openings might become pierced details in a lantern, while an element from a traditional door could inspire a decorative border around glass. A balanced silhouette and considered arrangement allow these references to remain legible.

When selecting lighting for a Najdi majlis, consider its relationship with the walls, doors and ceiling. Richly ornamented architecture may benefit from a quieter fitting, while a simpler interior can give a more expressive lantern room to become a focal point.

The light itself also matters: how does it reveal the wall's texture, and how do people's faces appear when seated? Through this relationship between fitting and setting, lighting becomes part of the majlis's atmosphere and identity.

Further reading: 8 · sources at the end of this guide

CHAPTER 01 / THROUGH THE DESIGNER'S EYE

Salmani: Identity Carried Forward



A circular chandelier brings hanging lanterns into a contemporary composition.



A defined geometric silhouette carries Najdi-inspired ornament.

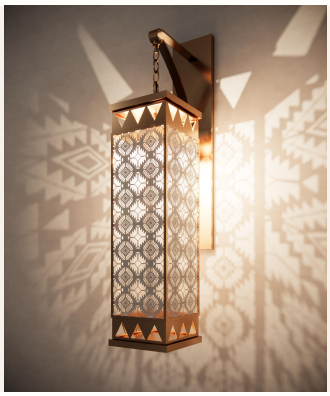

A wall lantern combines triangular details and patterned glass.



Outdoor lighting reinterprets elements of local architecture.

The Salmani approach draws on local identity while developing it for contemporary life. The King Salman Charter for Architecture and Urbanism identifies values including authenticity, continuity, human centricity, livability, innovation and sustainability. These principles allow varied designs that respond to their setting and use.

In lighting, this approach can inspire a lantern informed by local architectural proportions, a pendant that reinterprets Najdi ornament with restrained detail, or a bespoke fitting designed in relation to surrounding walls and openings.

The design becomes complete when its performance supports its appearance: comfortable illumination, appropriate dimming and considered access for maintenance and component replacement. Decorative fittings can work with architectural lighting that reveals materials and circulation routes, allowing local identity to shape the experience of the whole space.

What should you ask before choosing?

Ask which stages are completed by hand, what materials are used, where the ornament draws its inspiration and whether the dimensions can be adapted. Then view the fitting illuminated. Understanding how it is made and how it performs helps you assess its value and find its place.

Further reading: 9 · sources at the end of this guide

CHAPTER 01 / THROUGH THE DESIGNER'S EYE

Proportion: A Balanced Presence

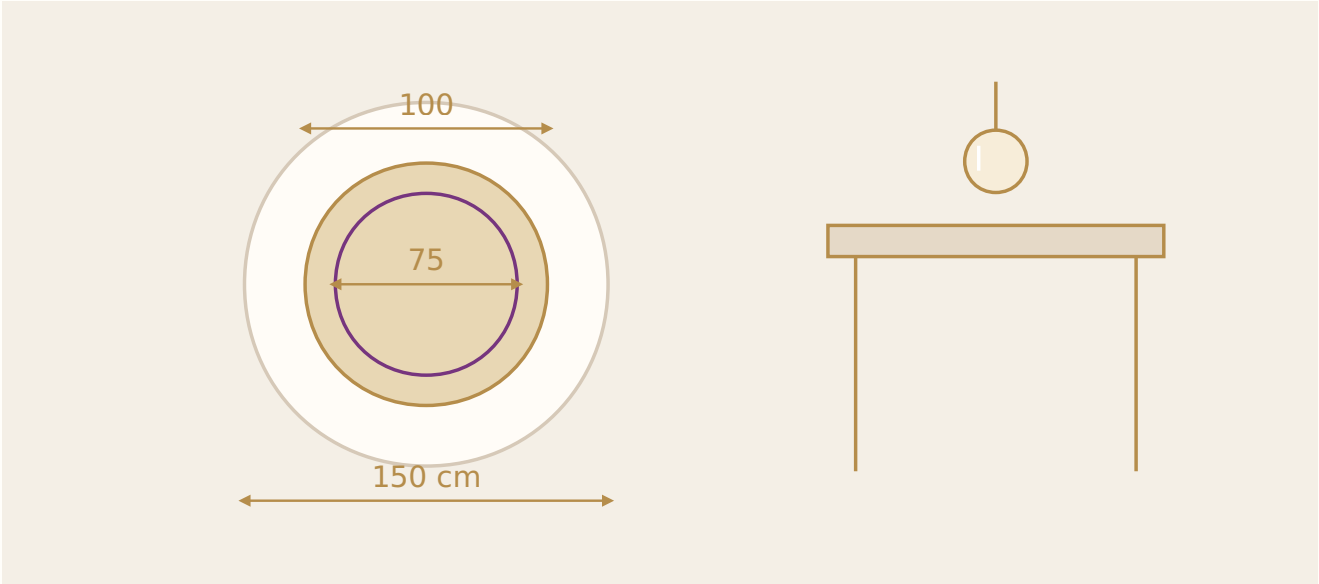

Comparison example: a 150 cm table with a 75–100 cm chandelier as a starting range. Review silhouette and visual presence as well.

A lighting piece comes into its own when its size and position suit the setting. A chandelier that looks beautiful in a showroom may feel small in a spacious majlis or crowded above a compact table. Begin with its relationship to the furniture, ceiling height and surrounding space.

Size and visual presence

Two fittings with the same diameter can create very different impressions. A chandelier filled with crystal and branching arms generally appears fuller than an open composition with space between its elements. Consider width and height alongside the shape and density of the design; dimensions alone cannot describe its presence.

Above a table: start with what is below

The table provides a useful reference for sizing. For a round chandelier, a diameter of approximately one-half to two-thirds of the table's width offers a starting point, adjusted to suit the design and setting.

Above a 150 cm round table, for example, you might begin by comparing chandeliers approximately 75–100 cm in diameter. This is a range to explore, rather than a prescribed size. A long table may suit an elongated fitting or several lights arranged along its length.

Further reading: 10 · sources at the end of this guide

CHAPTER 01 / THROUGH THE DESIGNER'S EYE

Hanging Height

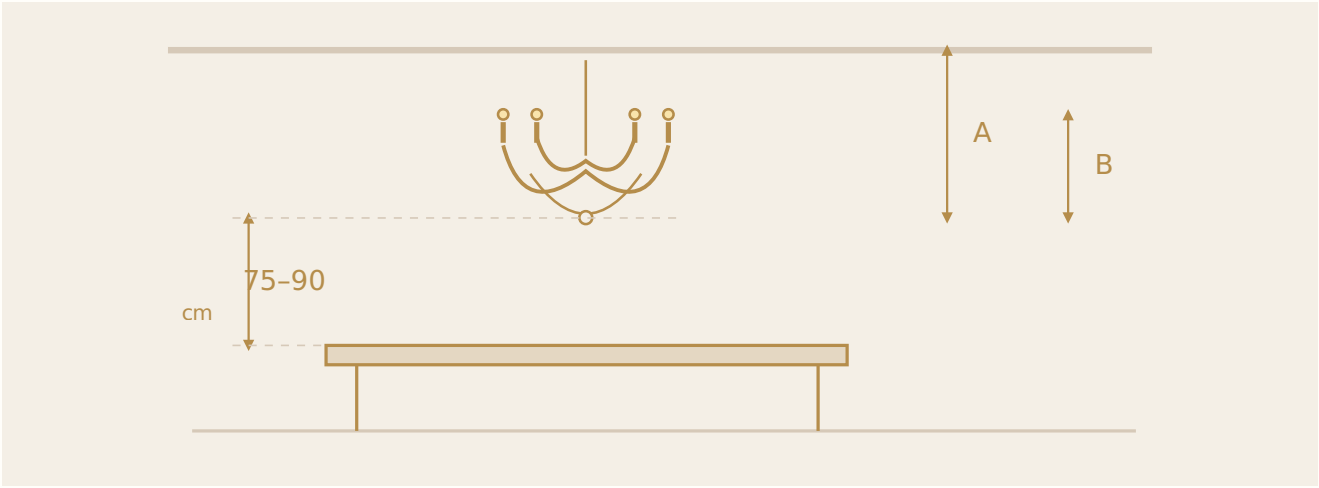

75–90 cm from tabletop to the lowest part: a starting point. A: total installed drop. B: fitting body height.

With multiple pendants, assess the width and length of the whole group, including the spaces between its elements. Request a drawing showing the arrangement above the actual table; a photograph of one pendant cannot communicate the complete composition.

Hanging height is part of the design

Above a dining table, approximately 75–90 cm between the tabletop and the lowest point of the fitting is a common starting point. Review this height against the chandelier's size, ceiling height, sightlines between seated people and visual comfort when illuminated.

In entrances and circulation areas, measure clearance from the finished floor to the lowest part of the fitting, allowing for movement and door openings. In double-height spaces, also assess the piece from the upper floor and different approaches.

Before confirming the dimensions

Distinguish between the height of the fitting itself and its total installed drop, including the chain or cables and ceiling canopy. Check the minimum and maximum achievable drop, particularly for fittings suspended on fixed rods.

Before purchasing, request a correctly scaled placement on a photograph or elevation of the room. A full-size paper outline can also help you judge its width and silhouette, while an illuminated viewing remains essential for assessing the light itself.

Further reading: 10 · sources at the end of this guide

CHAPTER 01 / THROUGH THE DESIGNER'S EYE

Beneath a Dome: Two Forms in Harmony

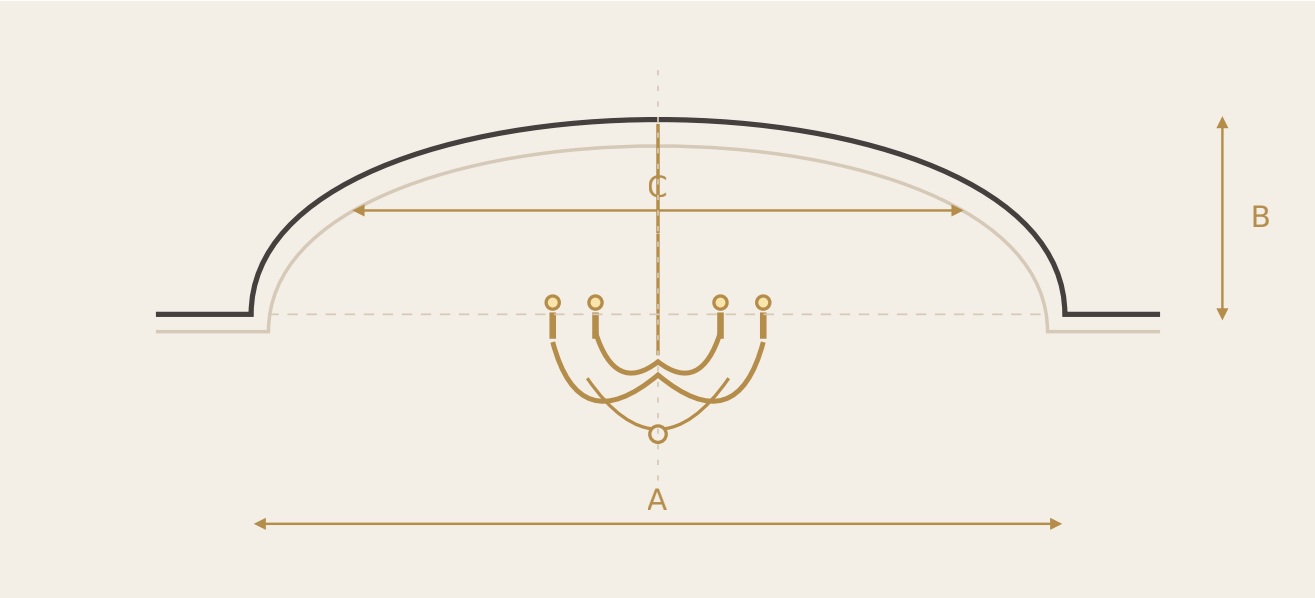

A: opening diameter. B: dome depth. C: internal width at a particular level. Available width changes with the curve.

A dome gives a chandelier a distinct architectural frame. Begin with the diameter of the dome opening, its depth and the height of its rim above the finished floor, then consider how its curve relates to the chandelier's silhouette.

A shallow dome can be explored with a wider, shorter fitting, while a deeper dome offers scope for a taller or tiered composition. Choose a width that leaves space around the chandelier so that both forms remain visible. Dense crystal and branching arms also affect how much visual space the fitting needs.

Where part of the chandelier sits inside the dome, check the available width at that level, as the internal clearance changes with the curve. The body may need to descend below the rim to remain clearly visible from the entrance and seating areas.

A side elevation showing the dome and chandelier together helps establish body size and suspension length. A deeper dome may require a longer chain without requiring a larger chandelier.

Further reading: 1 · sources at the end of this guide

CHAPTER 01 / THROUGH THE DESIGNER'S EYE

Beside the Stairs: A Changing Perspective



One composition. Many viewpoints.

Stepped pendants follow the height of the void.

Space around the fitting keeps its form readable.

Review the view from below and from the landing.

Bōzu · Masiero · p.25

A stairwell chandelier is viewed from below, from landings and while moving between floors. Its size therefore relates to the clear opening between the stairs and balustrades, the available height and the principal viewpoints.

A tall, narrow opening can accommodate a slender vertical composition, while a wider void offers scope for broader arms or tiers. Staggered pendants can distribute the fitting's presence across several levels.

Compare the fitting's width with the available space throughout its suspended height, checking its relationship to balustrades and landings. Wherever it extends above a walking route, assess clearance above the affected treads and landings against the project's requirements.

Request a drawing that includes both floors. A chandelier may look balanced from the entrance yet appear too high or too close to eye level from the upper landing. Complement it with lighting that clearly reveals stair edges and the route of travel.

Further reading: 1 · sources at the end of this guide

CHAPTER 01 / THROUGH THE DESIGNER'S EYE

In the Entrance: The First Impression



A tall foyer with a large chandelier and a clear entrance axis and circulation route. Concept illustration.

First define the space the chandelier will occupy: the foyer's boundaries, the entrance axis and its relationship to doors, columns and furniture. In an entrance that opens into a larger living area, this helps establish a size appropriate to the reception zone.

Under a lower ceiling, a shallow fitting can provide a clear decorative presence while preserving circulation space. A double-height entrance offers scope for a taller or tiered body that responds to the room's vertical proportions.

Assess the chandelier from the doorway, from inside the home and from the upper floor where applicable. If a high window sits behind it, consider its relationship to the window frame as well. Check the final position and height against door swings and circulation routes.

Before confirming the size

Compare two or three sizes on a floor plan to assess width and a side elevation to assess height and suspension. This reveals how each option changes the relationship with the space and supports a more informed decision than a product photograph alone.

Further reading: 1 · sources at the end of this guide

CHAPTER 01 / THROUGH THE DESIGNER'S EYE

A Shared Design Language

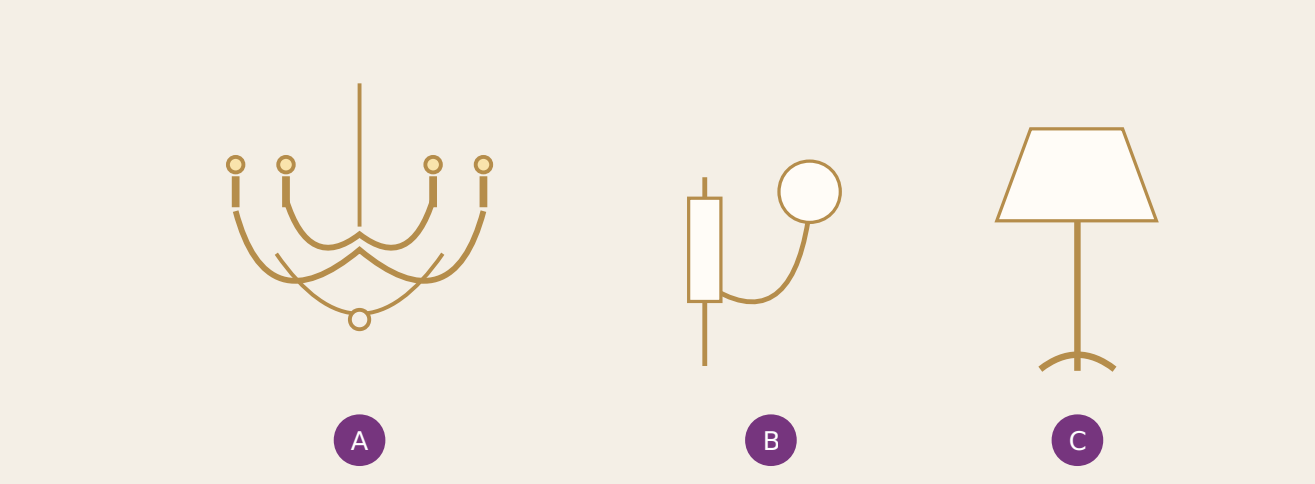

A shared curve connects A: chandelier, B: wall light and C: table lamp, with different proportions for each.

A room's character develops through the relationship between its lighting pieces. Chandeliers, wall lights and table lamps are seen together, and their proportions, forms and finishes shape the overall composition.

A coordinated collection can give the room a clear sense of unity. Alternatively, different designs can be brought together through shared details, allowing the combination to express the character of the space.

Find the connection

Look for a relationship the eye can recognise: a recurring curve, a similar glass shape, a metal finish or a decorative detail. Each piece can express that connection differently.

In a classical majlis, for example, the curves of the wall lights might echo the chandelier's arms, while fabric-shaded table lamps introduce a quieter element. In a contemporary setting, suspended glass globes could relate to circular wall lights through their shape, with variation in size and arrangement.

Balance their presence

Decide which piece should draw the eye first, then choose fittings that complement it. An elaborate chandelier can be supported by wall lights that repeat selected details in a lighter composition. A simpler chandelier may leave greater scope for expressive table lamps or wall lights.

In formal, symmetrical rooms, repeating wall lights from the same collection can reinforce the rhythm of the architecture. The degree of repetition should respond to the room, its furnishings and the desired atmosphere.

Further reading: 1, 2 · sources at the end of this guide

CHAPTER 01 / THROUGH THE DESIGNER'S EYE

Finishes and Open Spaces



Brushed: a finish with fine parallel lines. Illustrations show appearance, not base metal; approve the actual physical sample.

Compare finishes side by side

Different metal finishes can work together in a considered composition, with one repeated elsewhere in the room, such as on door handles or a mirror frame.

Where a close match is intended, request physical samples. Descriptions such as "gold" or "antique brass" can represent different colours across manufacturers. Compare colour, sheen and surface texture under lighting similar to the intended setting.

Across open spaces

Review the fittings visible within the same view. A dining chandelier, entrance pendants and living-area wall lights may all be seen together. Give each zone its own presence while maintaining a connection through form, finish or a recurring material.

Before confirming the selection, bring the fittings together on a design board alongside the furniture and finishes, with dimensions clearly indicated. This helps reveal excessive repetition, differences in scale or missing connections before purchasing.

Further reading: 11 · sources at the end of this guide

CHAPTER 01 / THROUGH THE DESIGNER'S EYE

When the Design Lights Up



Switched off



Illuminated

Once a fitting is illuminated, light becomes part of its design. Crystal sparkles, glass takes on a different appearance, and reflections and shadows extend into the surrounding space. Assess the fitting itself, what it illuminates and how it appears from the places where the room will be used.

Look at the illuminated piece

With exposed-bulb chandeliers, the bulb's shape, size and brightness become part of the composition. With glass fittings or pierced lanterns, observe how light spreads across the body and what patterns or reflections appear around it.

Ask to view the fitting with the lamps proposed for the installation. A different light source may change the effect that appealed to you in the showroom.

Light colour and interior colours

Light colour influences the atmosphere and the appearance of timber, stone, fabrics and metals. To compare two warm options, try 2700K and 3000K. The first appears warmer; the second offers a relatively crisper white while remaining warm. Compare them on samples of the intended finishes.

Colour rendering is a separate quality from colour temperature. Two sources with the same Kelvin rating may reveal fabrics, food or skin tones differently. Where colour fidelity matters, a CRI of 90 or above provides a useful starting point, supported by viewing the actual materials.

Further reading: 12, 13 · sources at the end of this guide

CHAPTER 01 / THROUGH THE DESIGNER'S EYE

What Light Draws



Lantern off and on: the pierced pattern extends onto the wall. Concept illustration; the actual effect depends on source and placement.

Shadows in lighting design

A fitting's presence extends into the patterns it casts around it. Shadows reveal the depth of ornament and the texture of a surface. A pierced lantern can create a composition of light and pattern across a wall or ceiling.

A surface for the pattern

A quietly detailed wall makes the lantern's effect easier to read. A richly patterned background may compete with its shadows and make the scene feel busy. Consider the fitting and the receiving surface together, deciding where this effect belongs.

The pattern and its sharpness depend on the openings, the size and position of the light source, and the distance to surrounding surfaces. View the lantern with the proposed lamp and assess its effect at a suspension height close to the intended installation.

Beauty that supports use

Shadows can lend character to a room, while faces, tabletops and circulation routes still need to remain clear. General or reading light can balance the scene when needed, preserving the lantern's presence.

Review the result from the entrance and from a seated position, with the other lighting sources operating. The choice includes both the beauty of the piece and what its light draws in the room.

Further reading: 17 · sources at the end of this guide

CHAPTER 01 / THROUGH THE DESIGNER'S EYE

Comfort and Changing the Atmosphere

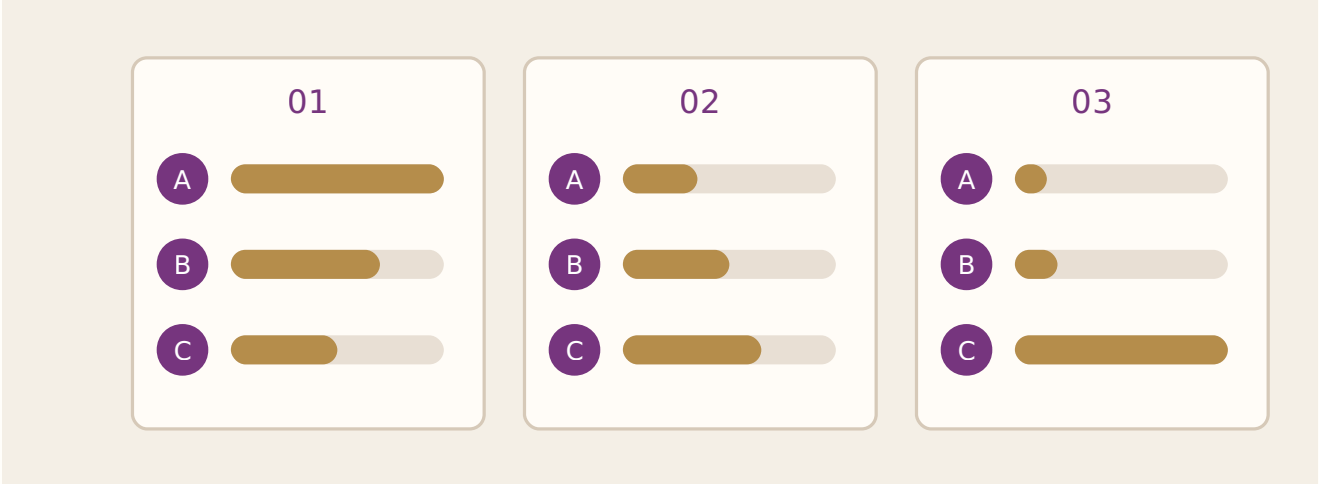

A: chandelier. B: wall lighting. C: task lighting. Three examples of balancing groups, without prescribed dimming percentages.

Comfort from where you sit

Assess the fitting at seated and standing eye levels, and from an upper landing where relevant. Check exposed lamps and their reflections in mirrors and glossy surfaces. Glare can reach the eye directly from a source or through a reflection.

If you find yourself squinting or looking away, review the source brightness, position, shielding or diffusion with the lighting professional. The fitting should remain comfortable from everyday viewing positions.

Dimming: room to change the atmosphere

Dimming allows the chandelier's presence to change with the time and occasion. It might be brighter when welcoming guests and softer during an evening gathering, while sufficient lighting remains available for movement or reading.

Before purchasing, confirm that the lamps or LED drivers are dimmable and compatible with the proposed control. Ask to test several levels, particularly the lower settings, checking for smooth adjustment and stable light without visible flicker.

Try the complete scene

View the chandelier together with the wall lights and architectural lighting, then operate each group separately. Separate control circuits help balance their contributions and create different settings within the same room.

Further reading: 14, 15 · sources at the end of this guide

CHAPTER 01 / THROUGH THE DESIGNER'S EYE

Before You Choose

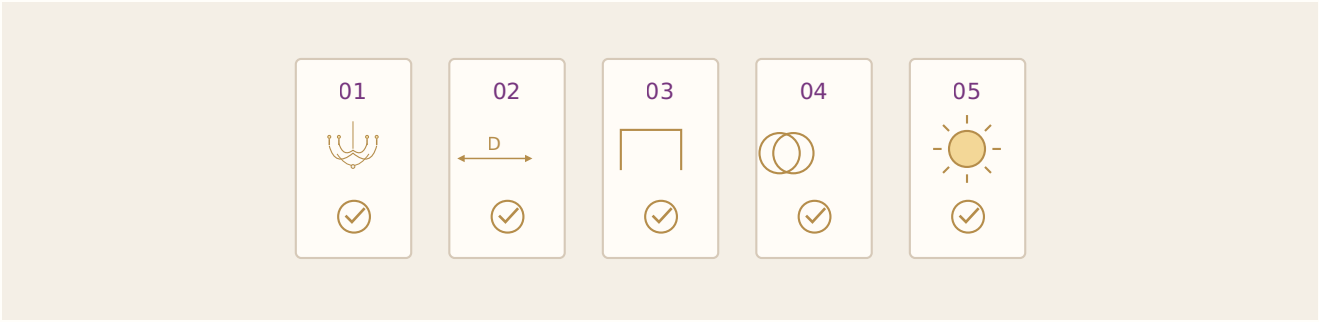

Character • dimensions • position • coordination • the illuminated scene

Once you understand the character you want and the scale and composition that suit the room, comparing fittings becomes easier. Before confirming your choice, consider these questions in relation to the setting where the piece will belong:

Does it express the character of the space?

Identify its connection to the architecture and furnishings through form, materials or crafted details. Picture its presence within the complete room.

Have you confirmed its dimensions?

Check the width, body height and total installed drop. For multiple pendants, assess the space occupied by the entire group, including the gaps between its elements.

Are its position and height appropriate?

Review its relationship to the table, dome or stairwell, and assess views from the entrance and seating areas. Check circulation routes and door swings.

Does it work with the other lighting pieces?

Bring together images of the chandelier, wall lights and table lamps that will be visible together. Review their shared details and relative sizes, and compare physical finish samples where a close match is intended.

Have you seen it illuminated?

View it with the proposed light source and from everyday eye levels. Observe the appearance of glass and crystal, surrounding material colours, reflections, shadows and visual comfort.

Further reading: 1, 10, 14 · sources at the end of this guide

CHAPTER 01 / THROUGH THE DESIGNER'S EYE

From Selection to Confirmation



Drawings, materials and fitting details reviewed together. Image from the Saif Al Jazira website.

Does it support the way the room will be used?

Establish what the fitting will illuminate and what other lighting will provide. If different settings are desired, confirm separate control of lighting groups and test the proposed dimming arrangement.

Is the selection clearly documented?

Keep an image or drawing of the selected fitting, together with its dimensions, finish, glass type, light-source specifications and controls. For bespoke pieces, approve the agreed drawings and samples before production begins.

Bring photographs of the room, a furniture layout, the finished ceiling height and available finish samples to the showroom. These details give the specialist a clearer basis for helping you and bring the selection closer to the result you envision.

Further reading: 1, 15 · sources at the end of this guide

CHAPTER 02 / THE LIGHTING GUIDE

Details That Define Value



Onyx and metal detail in Masiero Honicé. p.216.



A brass sheet with Moroccan-inspired engraving. Illustrative concept of the detail.

The value of a lighting piece lies in its materials, construction and attention to detail. Begin by identifying the base metal and its finish: a golden appearance may come from brass itself or from a finish applied to another metal, each with its own characteristics and care requirements.

Examine joints, edges and finish consistency, and ask which glass or crystal is used. For crafted pieces, establish which stages are completed by hand—such as shaping, engraving or piercing—and how the artisan's skill contributes to the design.

Compare cleaning requirements, replacement parts and after-sales support as well. These details help explain why two fittings that look similar in photographs may differ considerably in their construction.

Further reading: 3, 11 · sources at the end of this guide

CHAPTER 03 / THE LIGHTING GUIDE

Lighting for Every Space



Reception room: a chandelier gives the seating a visual centre. Purcell — Iris Cristal.



Dining: a composition above the table. Bōzu, Masiero, p.27.



Bedroom: independent bedside light. Posy, Masiero, p.178.

Begin with what happens in the room, then select fittings that support those activities. In a majlis, a chandelier can establish character, complemented by wall lights or architectural lighting that reveals surfaces and supports comfortable seating. Above a dining table, consider illumination on the tabletop and the visibility of faces around it.

In bedrooms, independent bedside reading lights and accessible controls are useful. Entrances and stairs need clearly visible circulation routes and stair edges alongside their decorative focal piece.

These sources work together to provide general illumination, task lighting and emphasis on selected features. Establish furniture layouts and activity locations before confirming electrical points, and identify which lighting groups should operate independently.

Further reading: 1, 2 · sources at the end of this guide

CHAPTER 03 / THE LIGHTING GUIDE

Entrances, Stairs and Tall Spaces



Entrance: relate the chandelier to the doorway axis and foyer height. Royal Deluxe — Iris Cristal.



Staircase: a vertical composition seen from the landing and below. Valentina — Iris Cristal.



Tall space: a group of elements responds to the architecture's scale. Nimbus A01 — Iris Cristal.

Read these spaces through both light and movement. In an entrance, the chandelier relates to the entry axis and the foyer's boundaries. Beside a staircase, its presence changes as you climb and reach the landing. A tall void allows an extended composition or a group of elements at different levels.

Begin with a plan showing doors, stairs and balustrades, then review the composition in elevation. Establish the lowest installed point, the space around the fitting, and access for cleaning and maintenance.

Lighting circulation routes and stair edges remains part of the choice. The decorative piece works alongside sources that help people see and use the space comfortably.

Further reading: 1, 10 · sources at the end of this guide

CHAPTER 04 / THE LIGHTING GUIDE

Understanding the Light

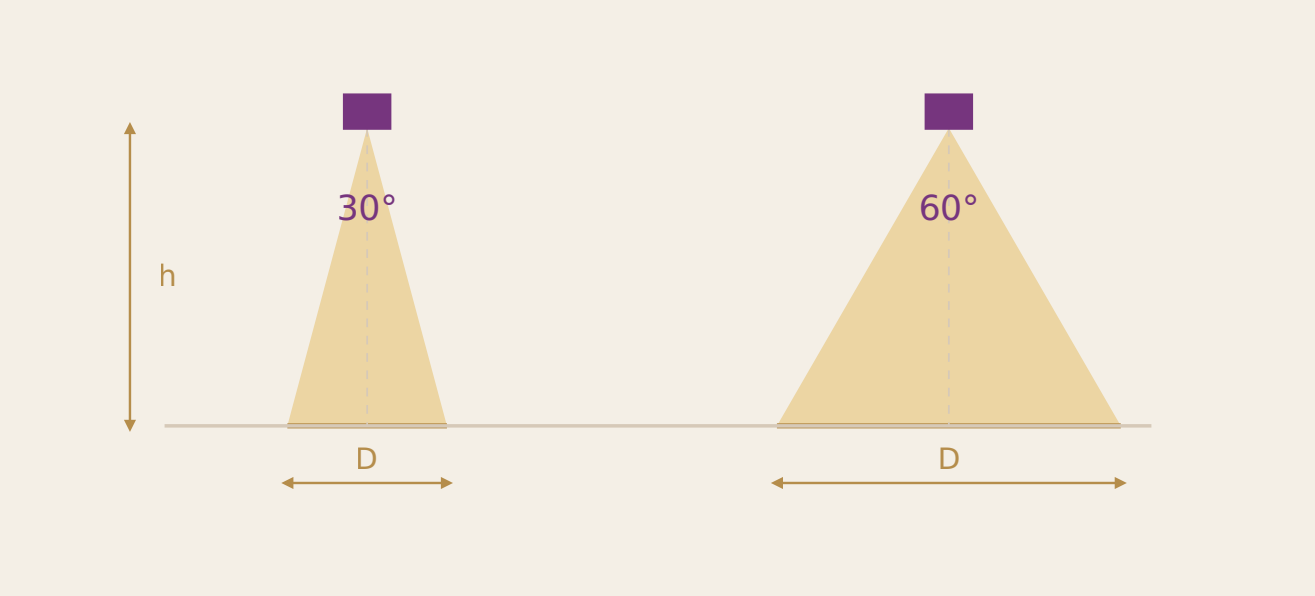

At the same distance h, a 60° beam covers a wider diameter than a 30° beam. Simplified geometry, not an illuminance map.

A few specifications help you make an informed choice. Lumens describe emitted light output, while watts indicate electrical power consumption. The light reaching a table or wall also depends on beam angle and distance: a narrow beam concentrates light, while a wider beam covers a larger area at the same distance.

Kelvin describes the warmth or coolness of white light, while CRI helps assess colour fidelity. Consider these properties alongside the intended activity, visual comfort and surrounding materials.

If dimming is required, confirm compatibility between the lamps or drivers and the control. For larger spaces or high ceilings, a lighting assessment helps establish suitable output, quantities and positions.

Further reading: 12, 13, 15, 16 · sources at the end of this guide

THROUGH THE DESIGNER'S EYE: SELECTED EXAMPLES / 01

Arms and Layers

Two chandeliers can bring a classical presence to a room through different structures: arms extending around an axis, or details gathered into a layered body.



Statua 52 Ovale

Lavai

The idea: Branching arms and ascending tiers give the body a pronounced vertical reach, enriched by glass details.

In the room: Consider it for a tall foyer or generous hall where the whole composition can be seen.

Before choosing: Review height and width together, the visibility of the arms against the background, and cleaning access.

Lavai catalogue · pp. 10–11



Manacor Basket

Iris Cristal

The idea: Layers and crystal details gather into a full, tiered body; the overall mass is read before the individual details.

In the room: Explore it for a formal reception room or foyer that calls for a strong central focal point.

Before choosing: Compare its visual weight with the room: a dense body changes how the size is perceived.

Classic 2024 · pp. 14

An editorial reading of the illustrated examples. Confirm dimensions, suspension and light source for the chosen fitting and setting.

THROUGH THE DESIGNER'S EYE: SELECTED EXAMPLES / 02

Colour and Line

A chandelier's character changes with its lines and colour, even when it retains a central arrangement. Consider how each piece relates to its background.



Tribeca

Multiforme

The idea: Clear arms and cylindrical elements recast the chandelier as an orderly rhythm with restrained detail.

In the room: Consider it in a seating area or over a table, relating the spread of its arms to the furniture.

Before choosing: Review arm span, visibility of light sources from a seated position, and coordination with nearby metal finishes.

Multiforme 2025 · pp. 156



Zenara

Iris Cristal

The idea: Curving glass lines and a smoke-green colour give the piece a distinctly sculptural character.

In the room: A quiet background lets form and colour stand out; a restrained furnishing detail can echo the colour.

Before choosing: View the glass colour both off and on, and allow visual space around the outer edges.

Infinity 2025 · pp. 24

An editorial reading of the illustrated examples. Confirm dimensions, suspension and light source for the chosen fitting and setting.

THROUGH THE DESIGNER'S EYE: SELECTED EXAMPLES / 03

Horizontal or Vertical?

The direction of a composition changes its relationship with the room. It may follow a long piece of furniture or occupy a vertical space; begin with the shape available around it.



Polaris

Multiforme

The idea: A rectangular composition with hanging glass elements, defined by horizontal extension and repetition.

In the room: Explore it over a rectangular table or island, aligning its axis with the working surface.

Before choosing: Compare body length and width with the table, then review the drop and sightlines between seated people.

Multiforme 2025 · pp. 164



Naxos

Iris Cristal

The idea: Twisting elements descend from a circular base, building a vertical body with a strong sense of movement.

In the room: Consider a central position in a space that accommodates the body height and allows views from the sides.

Before choosing: Check the lowest installed point, proximity to eye level, and access for maintenance.

Infinity 2025 · pp. 50

An editorial reading of the illustrated examples. Confirm dimensions, suspension and light source for the chosen fitting and setting.

THROUGH THE DESIGNER'S EYE: SELECTED EXAMPLES / 04

A Composition Shaped for the Space

In compositions made from multiple elements, spacing, heights and the group's overall boundary become part of the design. These catalogue scenes show two different arrangements.



Nimbus A02

Iris Cristal

The idea: A cluster of coloured elements steps through a tall space, with gaps that keep the individual elements readable.

In the room: Explore this visual approach in generous or tall spaces that call for a composition responding to the architecture.

Before choosing: Confirm the complete group boundary and levels in a drawing, then review the light effect and maintenance plan.

Nimbus · Endless Collection · pp. 16–17



Selene A03

Iris Cristal

The idea: Slender elements spread across a broad composition; the spaces between them are as visible as their forms.

In the room: It can respond to a wide seating or reception area, relating the composition's centre to the activity below.

Before choosing: Compare the arrangement from the entrance and seating positions, and review ceiling height and fixing points before approval.

Selene · Endless Collection · pp. 16–17

An editorial reading of the illustrated examples. Confirm dimensions, suspension and light source for the chosen fitting and setting.

FURTHER READING / 01

Sources & References

Further reading on design, craft and light. Book links below lead to publisher resources. The guide's proportion and hanging-height suggestions are starting points to be assessed against the room and fitting.

1 **Francis D. K. Ching & Corky Binggeli — Interior Design Illustrated**
Wiley · space, proportion and interior design

2 **Gary Gordon — Interior Lighting for Designers**
Wiley · lighting and the interior

3 **UNESCO — Engraving on metals**
Arts, skills and practices associated with engraving on metals

4 **UNESCO — Traditional Syrian glassblowing**
Handwork and the transmission of craft knowledge

5 **The Metropolitan Museum of Art — Islamic art**
Geometric patterns and decorative vocabulary

6 **Patronato de la Alhambra — Mosque lamp**
Lamp from the Alhambra's Great Mosque

7 **Museum of Islamic Art, Doha — Splendours of the Atlas**
Moroccan artistic traditions and collections

8 **Ithraeyat — Beyond the Door: Diriyah Season**
Najdi doors, ornament and local architectural references

9 **Saudi Press Agency — King Salman Charter**
Values of the King Salman Charter for Architecture and Urbanism

FURTHER READING / 02

Light & Image

10 **Visual Comfort — Chandelier sizing**
Practical starting points for proportions and hanging height

11 **Brass Light Gallery — Materials and care**
Base materials, finishes and maintenance questions

12 **ERCO — Light colours**
Colour temperature and atmosphere

13 **ERCO — LED colour rendering**
Colour fidelity and the appearance of materials

14 **ERCO — Quality assessment**
Visual comfort and perception

15 **Lutron — LED compatibility**
Dimming and control compatibility

16 **ERCO — Lighting technology and photometry**
Beam diameter and emitted light output

17 **ERCO — Shadow**
Direction, form and the modelling effect of shadows

IMAGE CREDITS

Behind the Images

Saif Al Jazira

The logo, selected website images and Najdi Style catalogue images on page 12 show fittings, lanterns and illustrative design and craft scenes. Not every scene is identified as a completed project or a documented workshop.

saifaljazira.com

Masiero — Dimore 2025

Nappe, Honicé, Bōzu and Posy photographs; printed pages 25, 27, 104–105, 178 and 215–216.

Lavai and Multiforme

Statua: Lavai catalogue, pp.10–11. Tribeca and Polaris: Multiforme 2025 catalogue, pp.156 and 164.

Iris Cristal

Manacor Basket: Classic 2024, p.14. Zenara and Naxos: Infinity 2025, pp.24 and 50. Nimbus: pp.10–11 and 16–17; Selene: pp.16–17. Purcell, Valentina and Royal Deluxe scenes: Projects 2024, PDF pages 14, 26 and 47.

Concept illustrations prepared for the guide

The foyer, finish samples, engraved brass sheet and shadow comparison are AI-generated illustrations explaining design ideas. They do not represent completed projects or approved product samples. The two page 9 photographs were digitally edited for presentation.

Diagrams and dimensions

Vector diagrams are simplified explanations, not construction drawings. Confirm dimensions, fixings, clearances and suspension loads against the fitting’s data and project requirements.

Image, design and trademark rights remain with their owners. Catalogue scenes are not attributed to Saif Al Jazira projects.

saifaljazira.com · info@saifaljazira.com